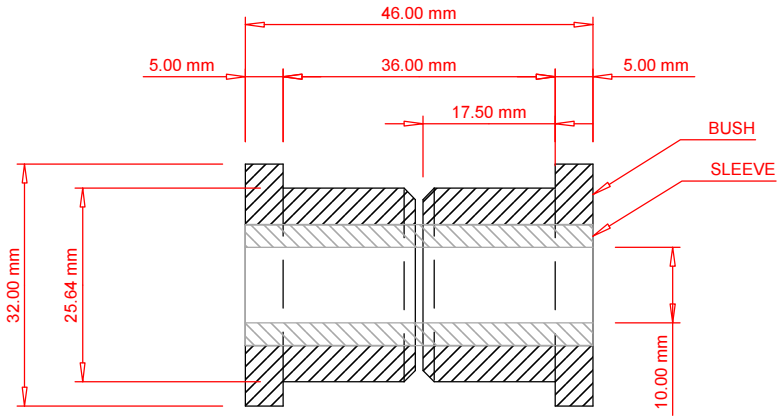

BUSH		
1.	MATERIAL	POLYURETHANE SHORE A 95
2.	COLOUR	BLACK
3.	BORE FINISH	KNURLED BORE
4.	KIT QUANTITY	2
SLEEVE		
1.	MATERIAL	STAINLESS STEEL
2.	LENGTH	46MM
3.	BORE	10MM
4.	KIT QUANTITY	1
TUBE & MOUNTING		
1.	TO SUIT BORE	1", 25.4MM TO 25.6MM
2.	TO SUIT WIDTH	35MM TO 36MM
3.	TO SUIT MOUNTING LENGTH	46MM
4.		

No.	REVISION	BY	CHKD	DATE
O	ORIGINAL ISSUE	P.S.		25/6/12

DESCRIPTION
UNIVERSAL BUSH, ROBIN HOOD & GBS ZERO

© COPYRIGHT. ALL RIGHTS RESERVED
THIS DRAWING IS STRICTLY CONFIDENTIAL AND MUST NOT BE COPIED, REPRODUCED OR ADAPTED, NOR MAY ARTICLES BE MANUFACTURED IN ACCORDANCE WITH THE DRAWING WITHOUT PRIOR WRITTEN PERMISSION OF POWERFLEX.

MATERIAL: POLYURETHANE SHORE A 95
DRAWING No.: 99–113
REV: O